TECHNICAL INFORMATION SHEET:
NEMOTO NP-17SH Single Header Pellistor Gas Sensor

General Description

The Nemoto NP-17SH is a catalytic (pellistor) type flammable gas sensor supplied as a matched pair of pellistor elements mounted on a single header and protected by a metal mesh enclosure and can.

The sensor detects and measures the presence of flammable gases and vapours in air, in the range 0-60% of the Lower Explosive Limit (LEL) of the gas or vapour being measured. Designed as a lower cost alternative to the twin-header NP-17 device, yet an improvement from the NP-17S the NP-17SH may be used as the sensing platform in fixed flammable gas detection systems up to 150ºC.

The NP-17SH exhibits excellent long term zero and sensitivity stability and a high level of resistance to catalytic poisons. The highly automated manufacturing procedure employed by Nemoto results in a repeatable reliable sensor which, unlike similar devices, requires no trimming resistor to enable the detector to be matched with a compensator.

Nemoto has a policy of continuous development and improvement of its products. As such the specification for the device outlined in the data sheet may be changed without notice

Specifications:

Recommended Voltage:	2.0V +/- 0.1V
Current Drawn:	170 +/- 20mA
Zero Offset:	0mV +/- 30mV
Sensitivity:	50-80mV/% CH4/Air
Range:	0-60% LEL
Accuracy:	+/- 1%LEL(CH_4)
Maximum Long Term Drift:	
Span:	< +/- 5% LEL/ 3 Months
Zero:	<+/- ½ mV/Month
Response Time:	T_{50}: 3 sec T_{90}: 8 sec

Recommended Circuit:

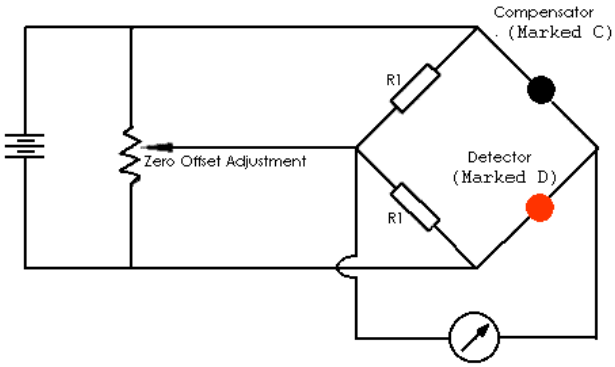

Note: The value R1 is arbitrary, since the function of R1 is to balance the bridge. 1KΩ is suggested.

Temperature Range:	-20°C to +150°C
Temperature Drift:	(-20°C to +70°C)
Zero:	< +/- 2%LEL
Humidity:	0-100%RH, non-condensing
Humidity Response:	+/- 2%LEL
Linearity:	Effectively Linear to 60%LEL

Test data on drift, poisoning, temperature performance, linearity will be available on the Characterisation Document np-17sh-CD.

ds-np17SH, issue 1, May 2008

NEMOTOTECH S.r.l. – 20010 Cornaredo (MI) ITALY Via Legnano, 2 – Tel.+39.02.93544190 – Fax +39 .02. 93540347
C.F. e P. IVA (VAT) 03231490966 – CAPITAL . 36.000 EU – Website: www.nemototech.it – E-mail: info@nemototech.it

Sensor Structure, Materials of Construction and Dimensions:

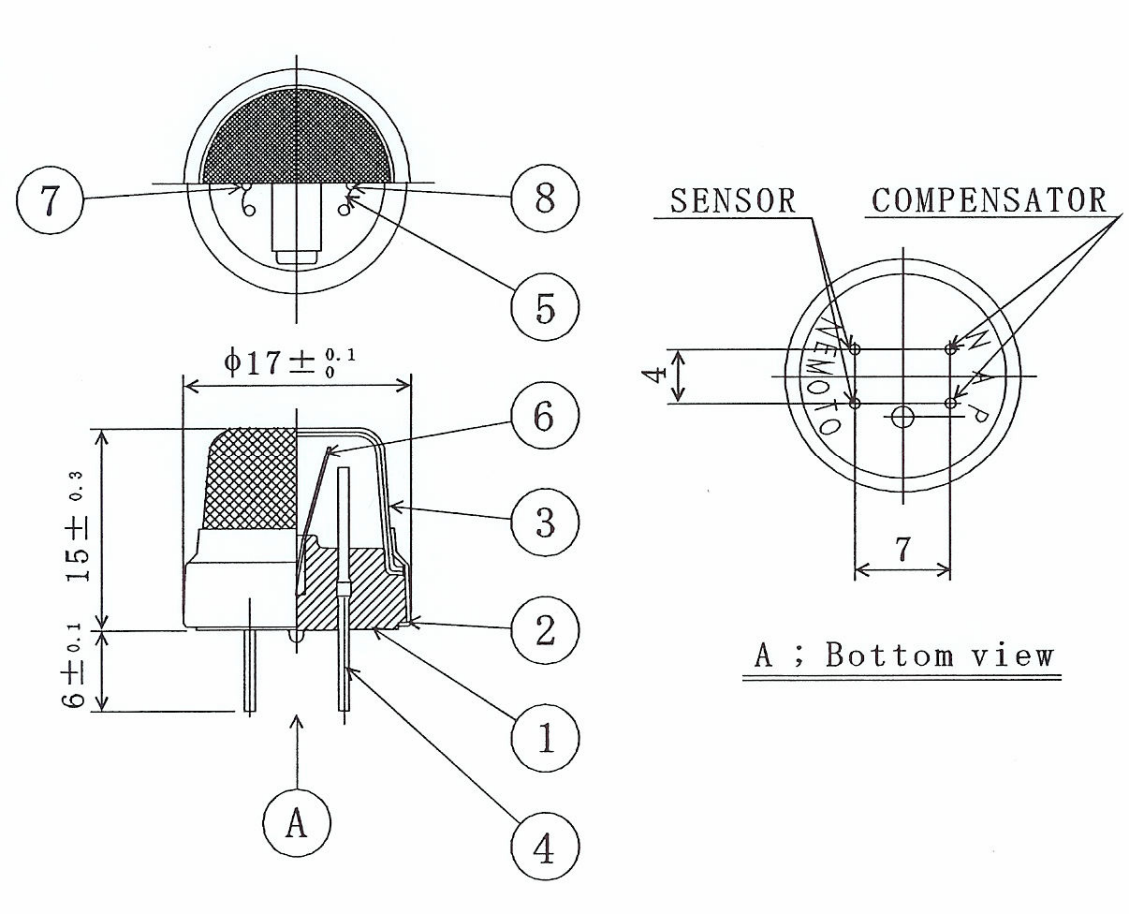

1) Mount Base, PM-EE Polymer
2) Metal skirt (C2680, Nickel plated)
3) Mesh Enclosure (SS316)
4) Pin (Pure Nickel)
5) Filament Coil (Pure Platinum)
6) Partition (SS304 CSP)
7) Detecting Element
8) Compensator Element

NEMOTOTECH S.r.l. – 20010 Cornaredo (MI) ITALY Via Legnano, 2 – Tel.+39.02.93544190 – Fax +39 .02. 93540347
C.F. e P. IVA (VAT) 03231490966 – CAPITAL . 36.000 EU – Website: www.nemototech.it – E-mail: info@nemototech.it